Project H.A.N.D.

(Handy Appendage for Nonlocal Distances)

The Handymen

(Collin MacDicken & Jonathan Kornich)

Final Presentation

Background

- Emo Todorov at University of Washington
  - 20 degrees of freedom
  - also controlled by a glove
  - 4 papers written on his project

What is H.A.N.D.?

- Robotic hand controlled remotely via a user worn glove.
  - 5 degrees of freedom
  - Wireless communication
  - 3 modes of operation

- Applications
  - Manipulate objects from a remote location.
  - Cheap alternative for prosthetic hand (with different interface).
  - Automation for menial tasks requiring human hand-like dexterity.
  - Home entertainment device.

Modes

Real Time Mimicry: Mimic user's finger movements in real time.

Rock-Paper-Scissors: Gloved user plays against robotic hand.

Screensaver: Iterates through pre-defined motions (for use on a mantle).

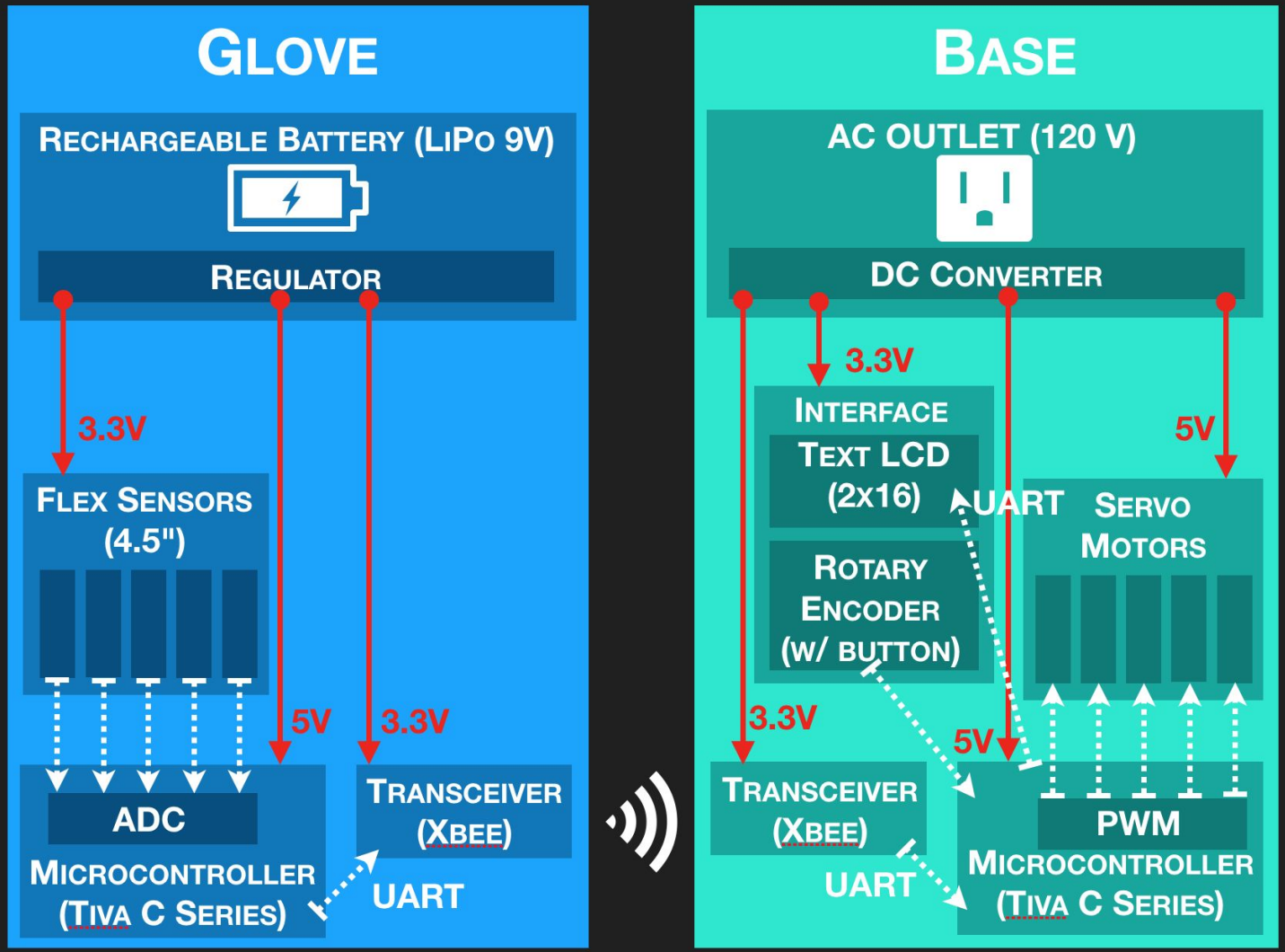
GLOVE
RECHARGEABLE BATTERY (LIPO 9V)
REGULATOR
3.3V
FLEX SENSORS (4.5")
5V
3.3V
ADC
MICROCONTROLLER (TIVA C SERIES)
TRANSCEIVER (XBEE)
UART
BASE
AC OUTLET (120 V)
DC CONVERTER
3.3V
INTERFACE
TEXT LCD (2x16)
ROTARY ENCODER (W/ BUTTON)
UART
5V
SERVO MOTORS
3.3V
5V
TRANSCEIVER (XBEE)
UART
PWM
MICROCONTROLLER (TIVA C SERIES)

Logic Flow Diagrams

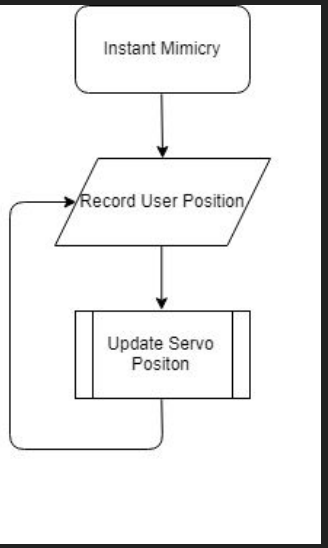

Instant Mimicry

Control Diagram

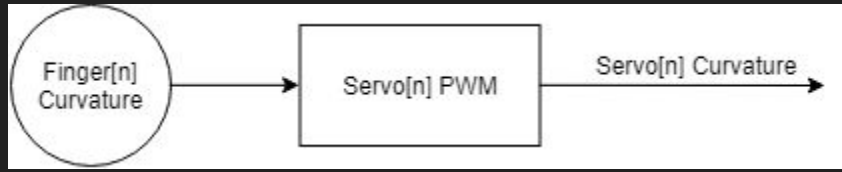

Rock-Paper-Scissors

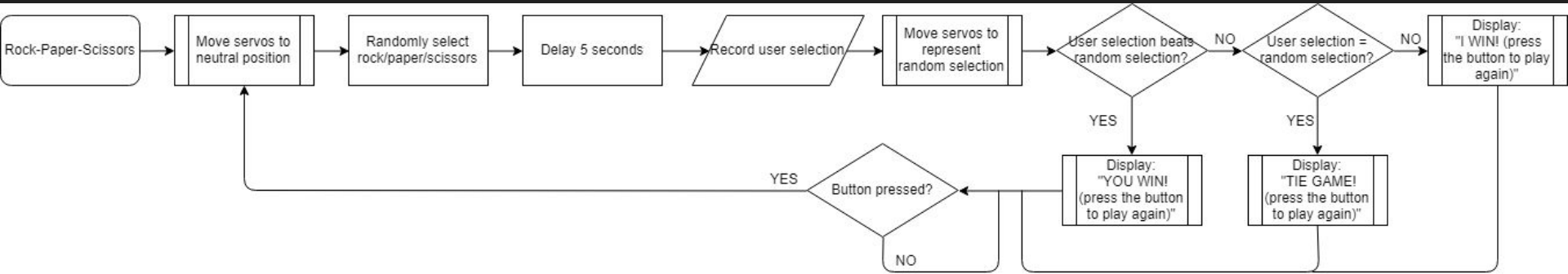

Base

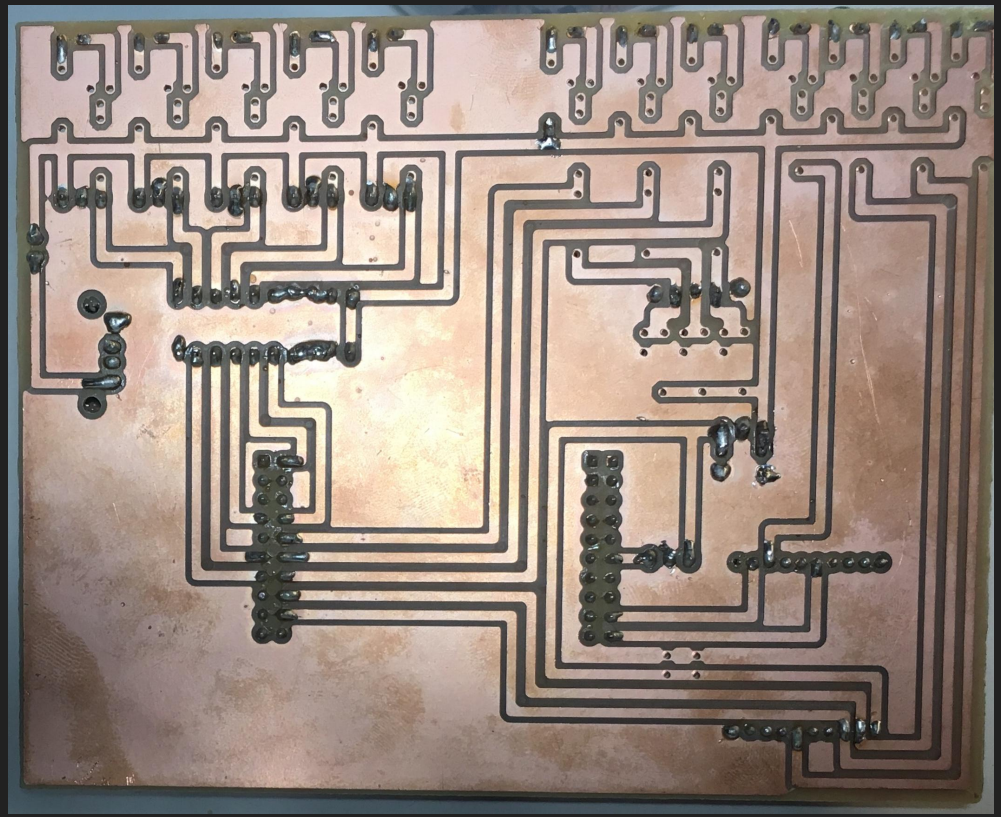

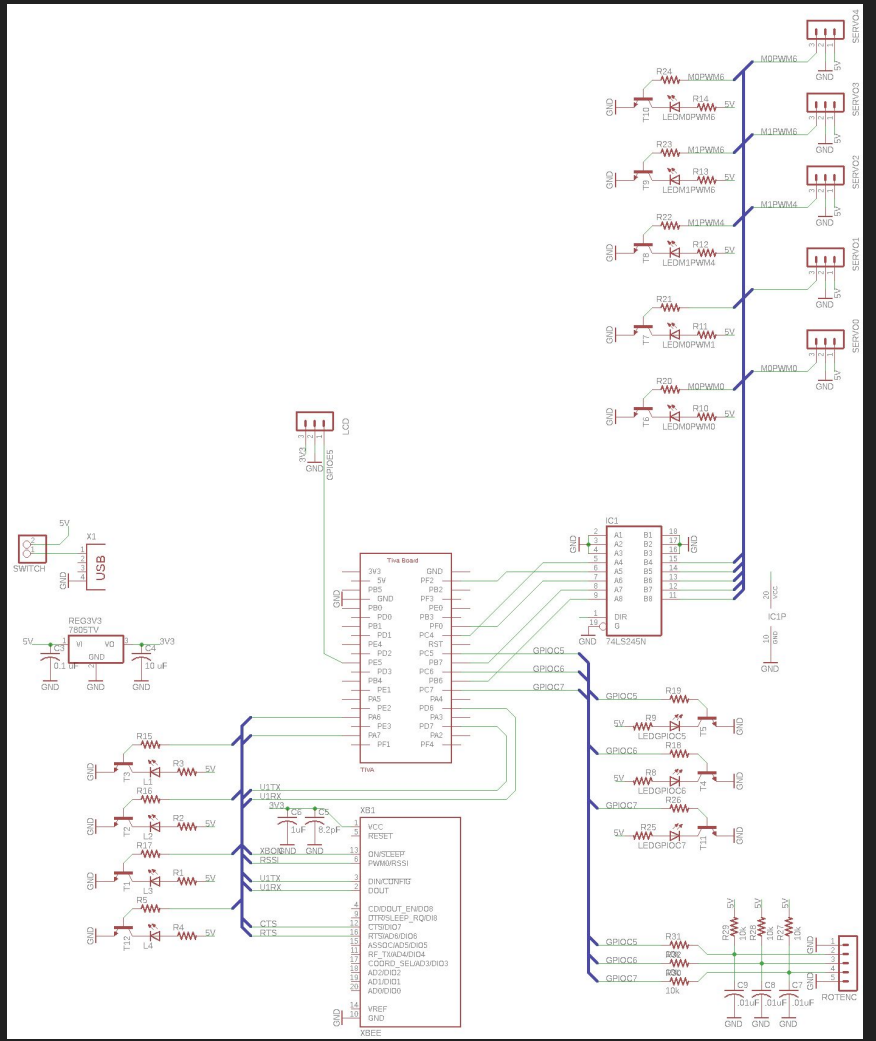

SERVO4
SERVO3
SERVO2
SERVO1
SERVO0
M0PWM6
M1PWM6
M1PWM4
M0PWM0
R24
R14
LEDM0PWM6
R23
R13
LEDM1PWM6
R22
R12
LEDM1PWM4
R21
R11
LEDM0PWM1
R20
R10
LEDM0PWM0
LCD
GPIOE5
SWITCH
X1
USB
REG3V3
7805TV
C3
0.1 uF
C4
10 uF
Tiva Board
TIVA
IC1
74LS245N
DIR
G
IC1P
GPIOC5
GPIOC6
GPIOC7
R19
R9
LEDGPIOC5
R18
R8
LEDGPIOC6
R26
R25
LEDGPIOC7
R15
R3
R16
R2
R17
R1
R5
R4
L1
L2
L3
L4
T3
T2
T1
T12
U1TX
U1RX
3V3
C6
1uF
C5
8.2pF
XB1
VCC
RESET
ON/SLEEP
PWM0/RSSI
DIN/CONFIG
DOUT
CD/DOUT_EN/DIO8
DTR/SLEEP_RQ/DI8
CTS/DIO7
RTS/AD6/DIO6
ASSOC/AD5/DIO5
RF_TX/AD4/DIO4
CCORD_SEL/AD3/DIO3
AD2/DIO2
AD1/DIO1
AD0/DIO0
VREF
GND
XBEE
R31
R30
10k
C9
C8
C7
.01uF
ROTENC

Base

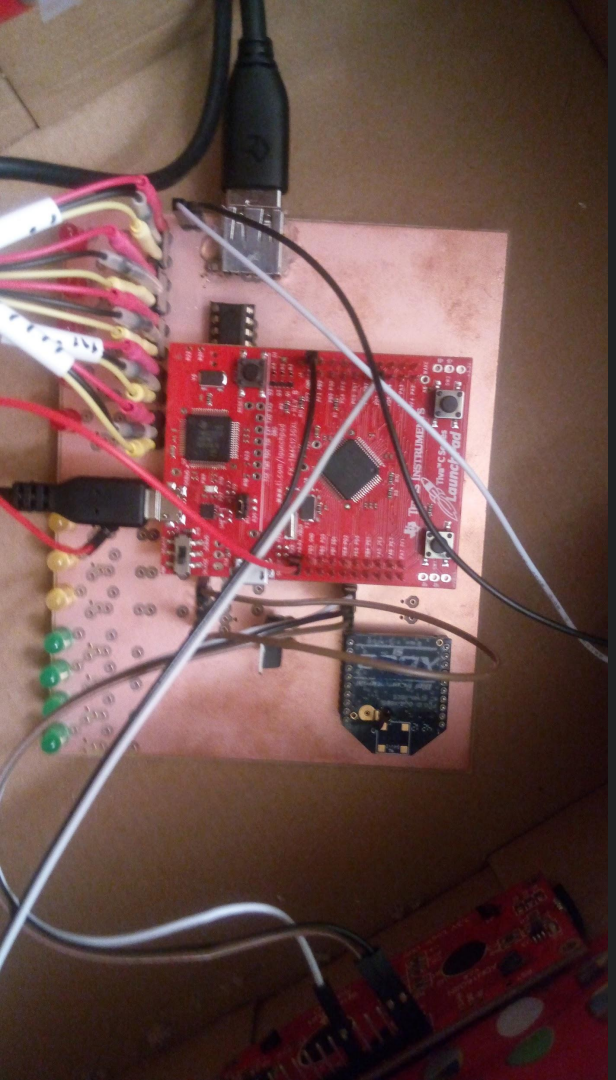

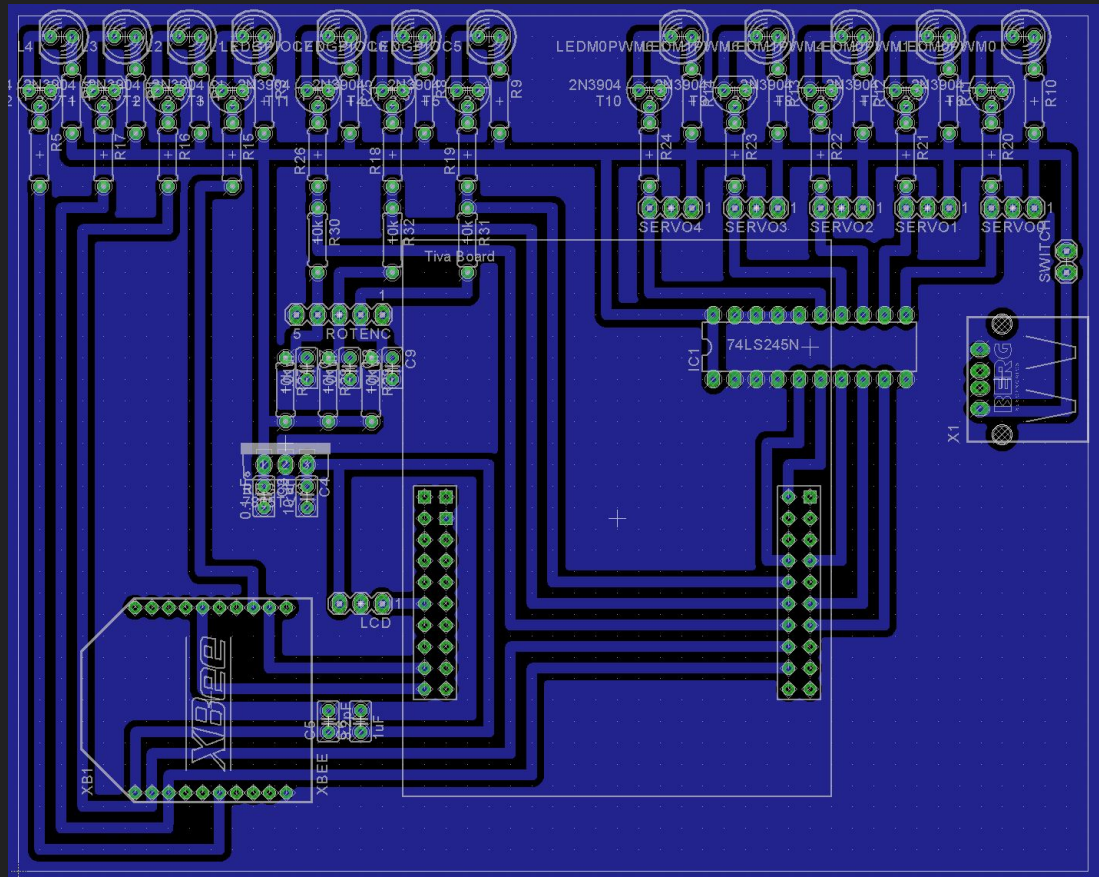
Tiva Board
ROTENC
74LS245N
LCD
XBEE
SERVO4
SERVO3
SERVO2
SERVO1
SERVO0
SWITCH
LEDM0PWM5
LEDM0PWM0
2N3904

Glove

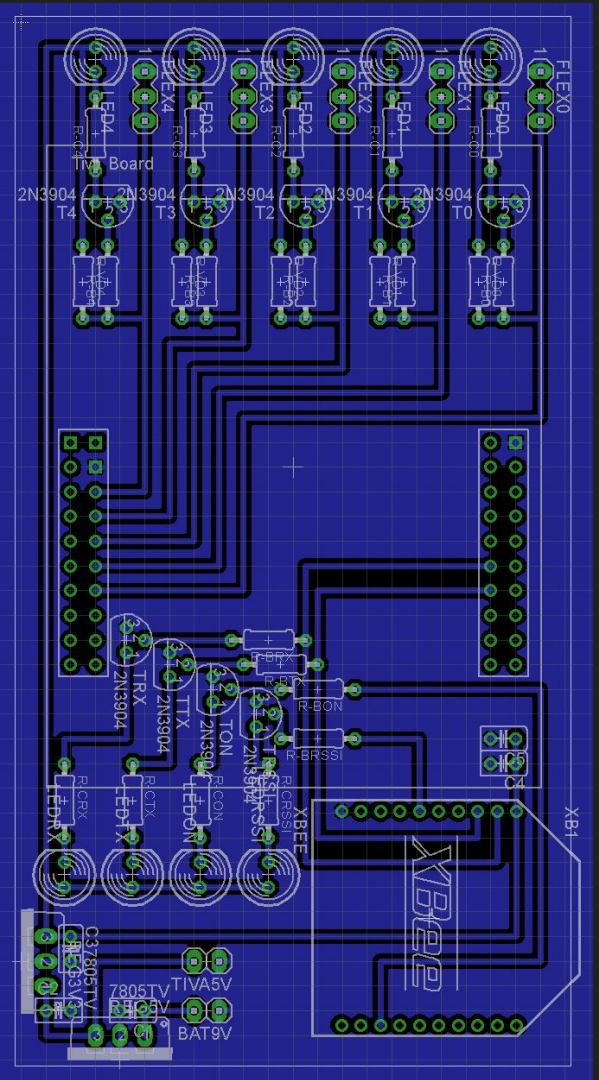

Tiva Board
2N3904
T4
T3
T2
T1
T0
FLEX4
FLEX3
FLEX2
FLEX1
FLEX0
LED4
LED3
LED2
LED1
LED0
TRX
TTX
TON
R-BRX
R-BTX
R-BON
R-BRSSI
LEDRX
LEDTX
LEDON
XBEE
XB1
C4
C37805TV
7805TV
TIVA5V
BAT9V

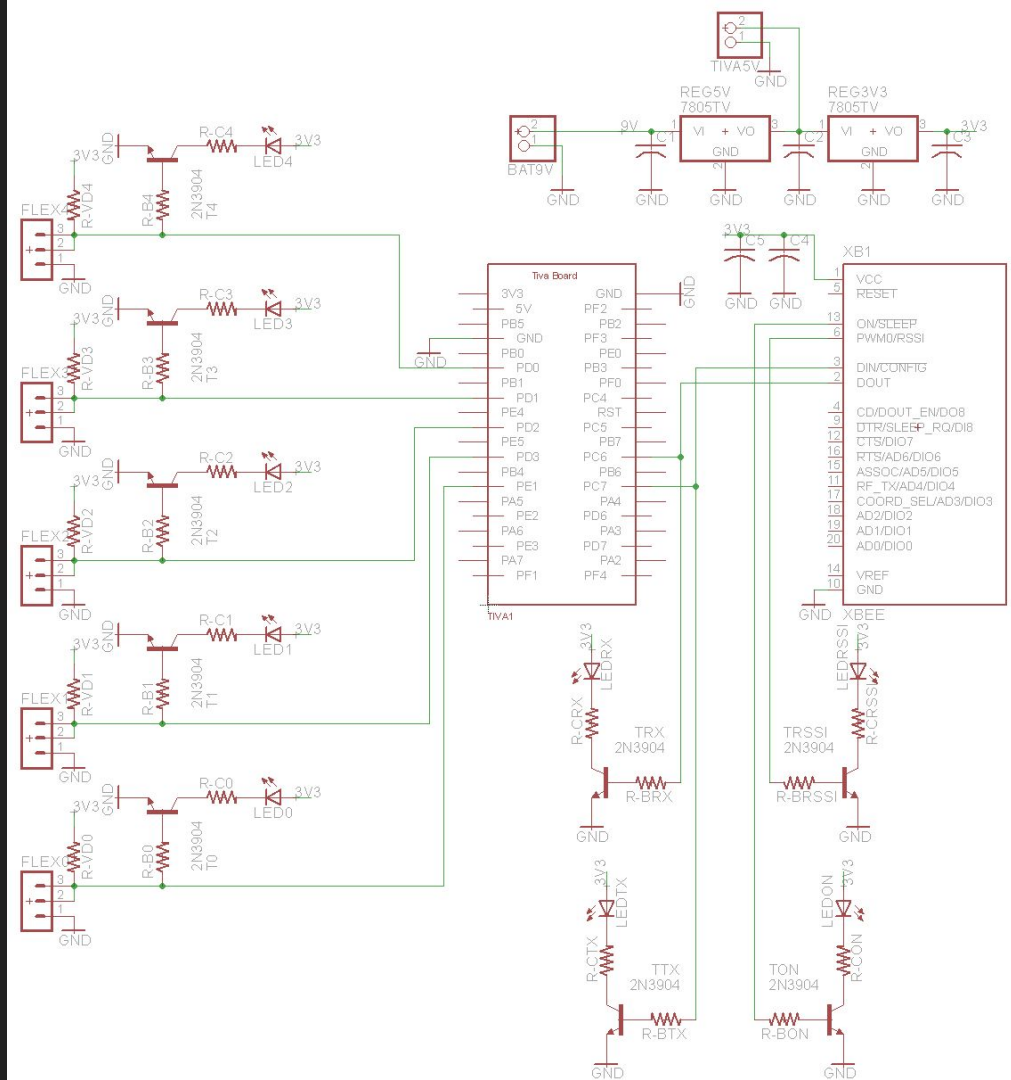

TIVA5V
REG5V
7805TV
REG3V3
7805TV
BAT9V
9V
C1
C2
C3
C5
C4
GND
3V3
R-C4
R-C3
R-C2
R-C1
R-C0
LED4
LED3
LED2
LED1
LED0
FLEX4
FLEX3
FLEX2
FLEX1
FLEX0
R-VD4
R-VD3
R-VD2
R-VD1
R-VD0
R-B4
R-B3
R-B2
R-B1
R-B0
2N3904
T4
T3
T2
T1
T0
Tiva Board
TIVA1
XB1
VCC
RESET
ON/SLEEP
PWM0/RSSI
DIN/CONFIG
DOUT
CD/DOUT_EN/DO8
DTR/SLEEP_RQ/DI8
CTS/DIO7
RTS/AD6/DIO6
ASSOC/AD5/DIO5
RF_TX/AD4/DIO4
COORD_SEL/AD3/DIO3
AD2/DIO2
AD1/DIO1
AD0/DIO0
VREF
GND
XBEE
TRX
2N3904
R-BRX
TTX
2N3904
R-BTX
TRSSI
2N3904
R-BRSSI
TON
2N3904
R-BON
LEDRX
LEDTX
LEDRSSI
LEDON
R-CRX
R-CTX
R-CRSSI
R-CON

Glove

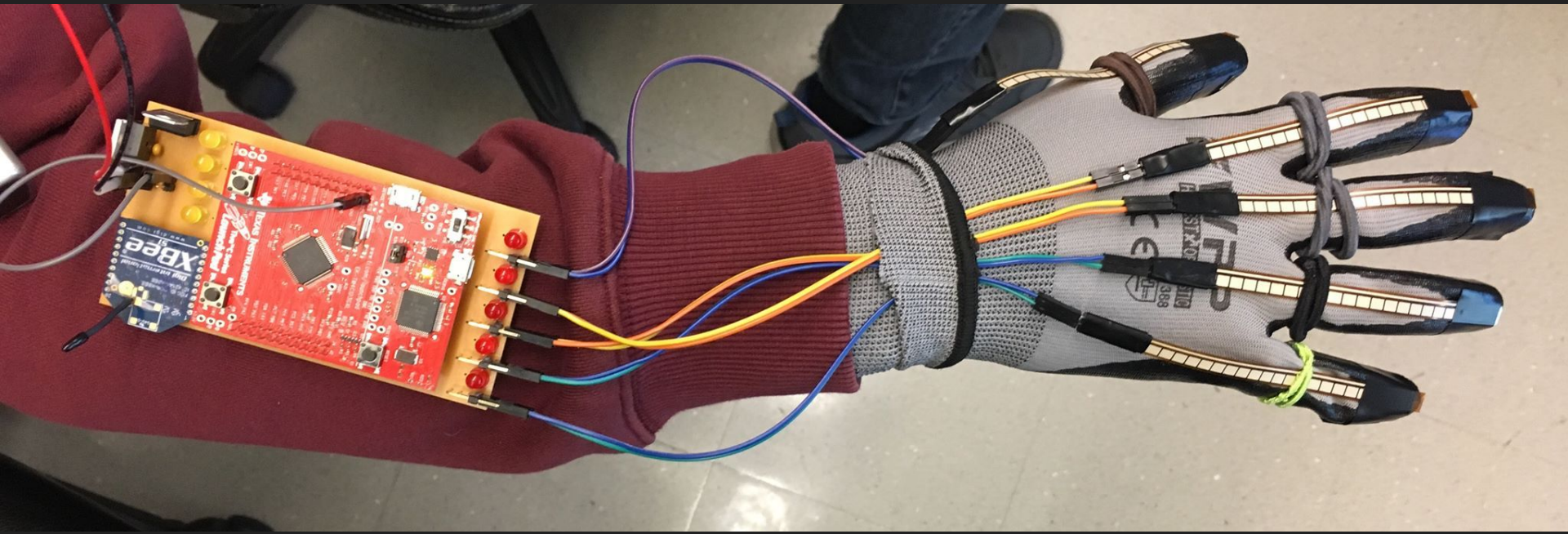

Power Consumption (Glove)

- WORST CASE current consumption
  - Tiva: 50mA
  - XBee (Transmitting): 33mA
  - GPIO / Flex Sensors: ~25mA
  - TOTAL: ~108mA
- Batteries: 600mA hr
- Expected battery life: ~6 hours.

Power Consumption (Base)

- WORST CASE current consumption
  - Tiva: 50mA
  - Servos (with load): 450mA x5 = 2250mA
  - XBee (receiving): 28mA
  - LCD: 30mA
  - Rotary encoder: ~5mA
  - TOTAL: ~2363mA
- Power supply: 2.4mA
- Expected life (wall plug): ∞

Base CAD

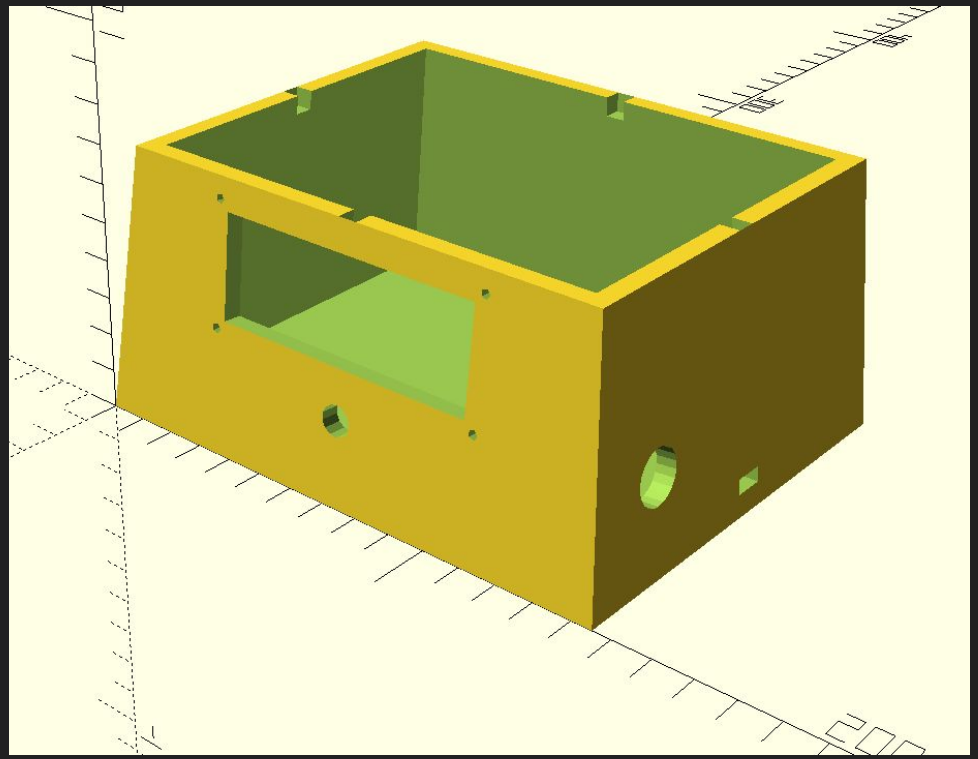

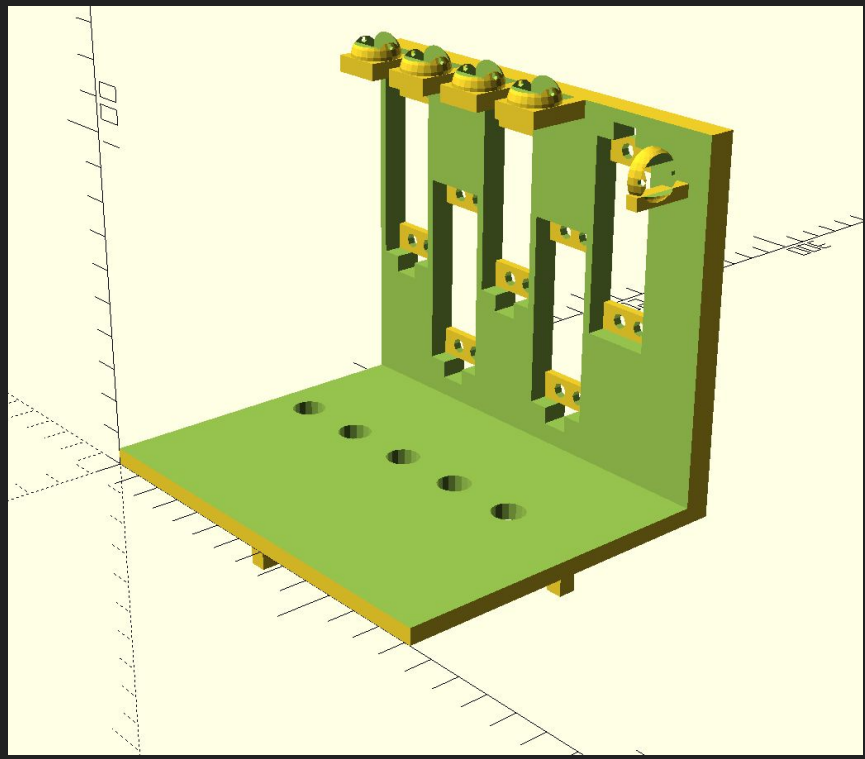

Base CAD (cont.)

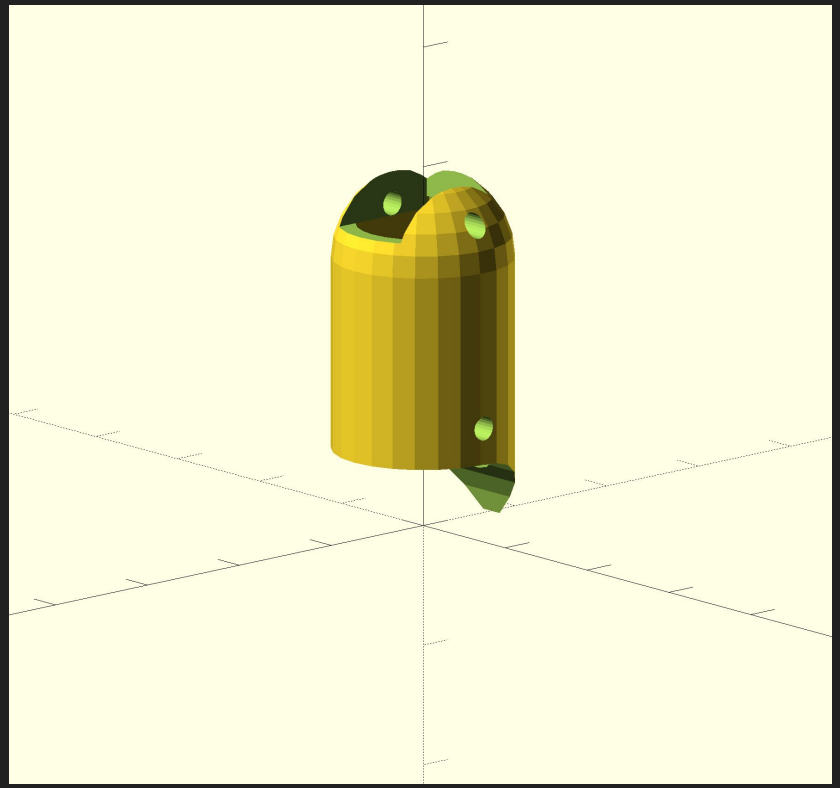

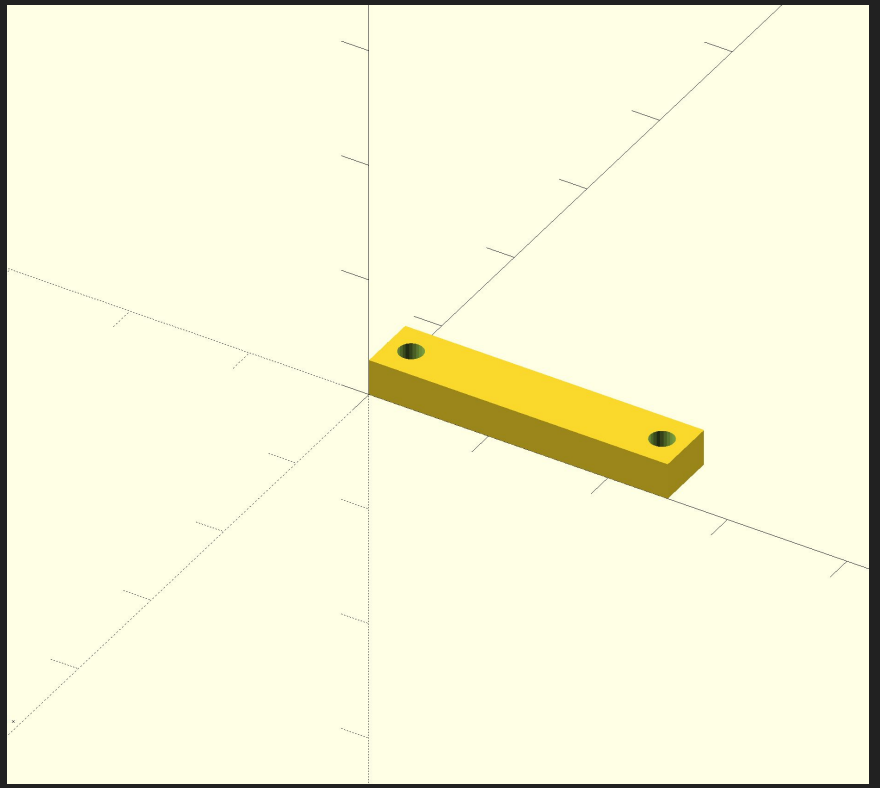

Going Forward

Implement mode 3: **Recorded Mimicry**.

Add a **battery powered** option for base.

3D print and **utilize team-designed** base and hand.

Conclusion

Robotic hand controlled wirelessly via a user worn glove.

Features 3 modes of operation.

Applications as a device to manipulate objects from a remote location, or as a cheap alternative to prosthetic hands.

Acknowledgements

Professor **Christian Hassard** for supervising the project.

Upperclassman **Cody Anderson** for many good ideas.

Thank you!